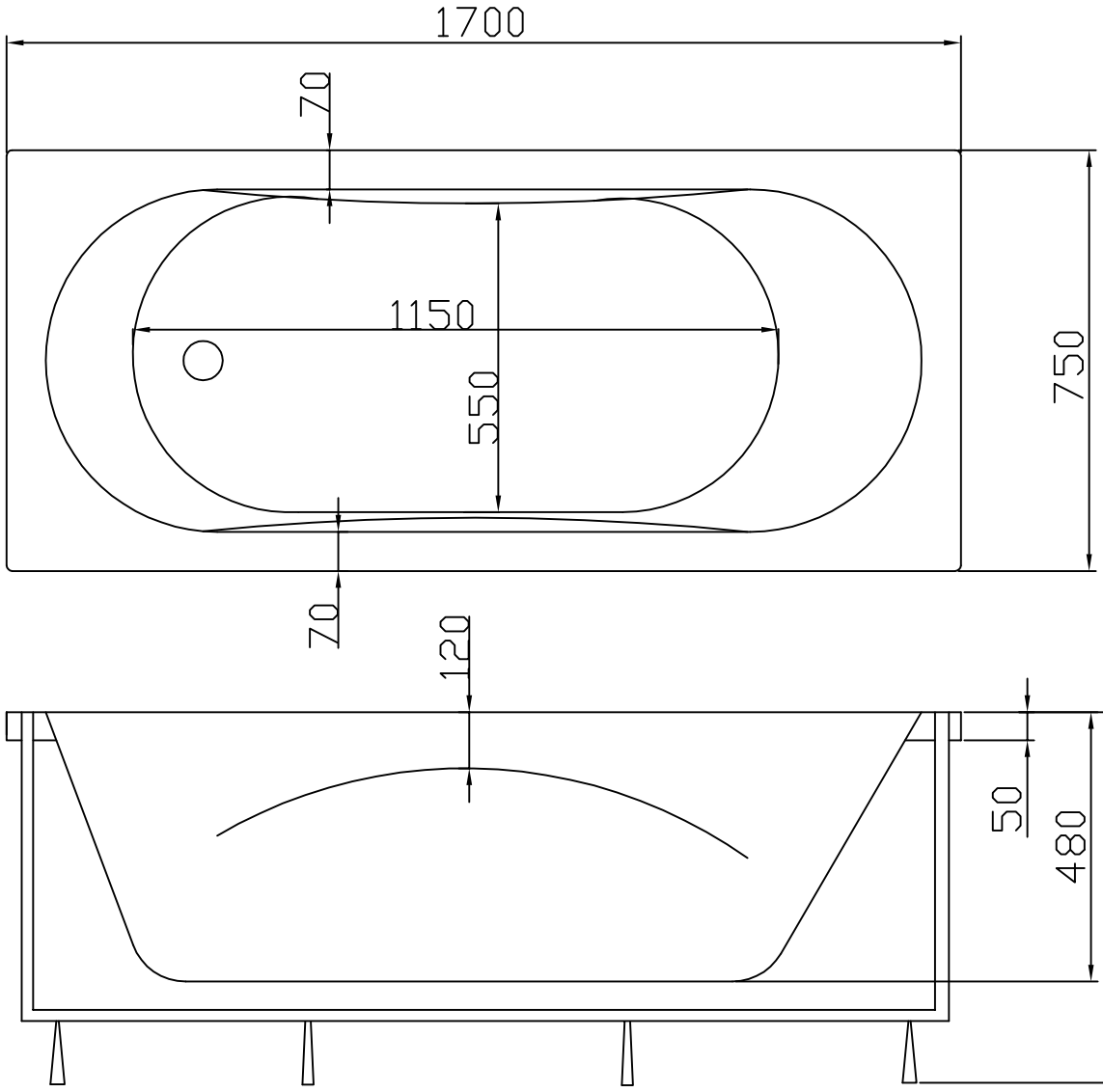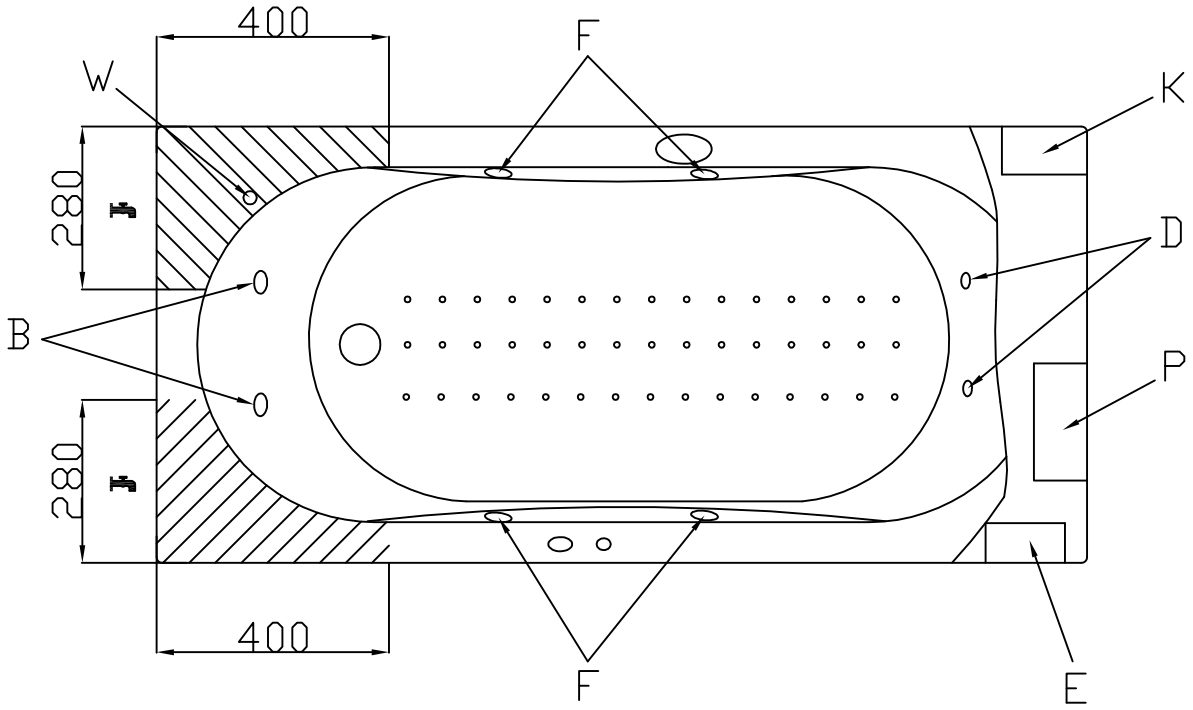JERSEY 170