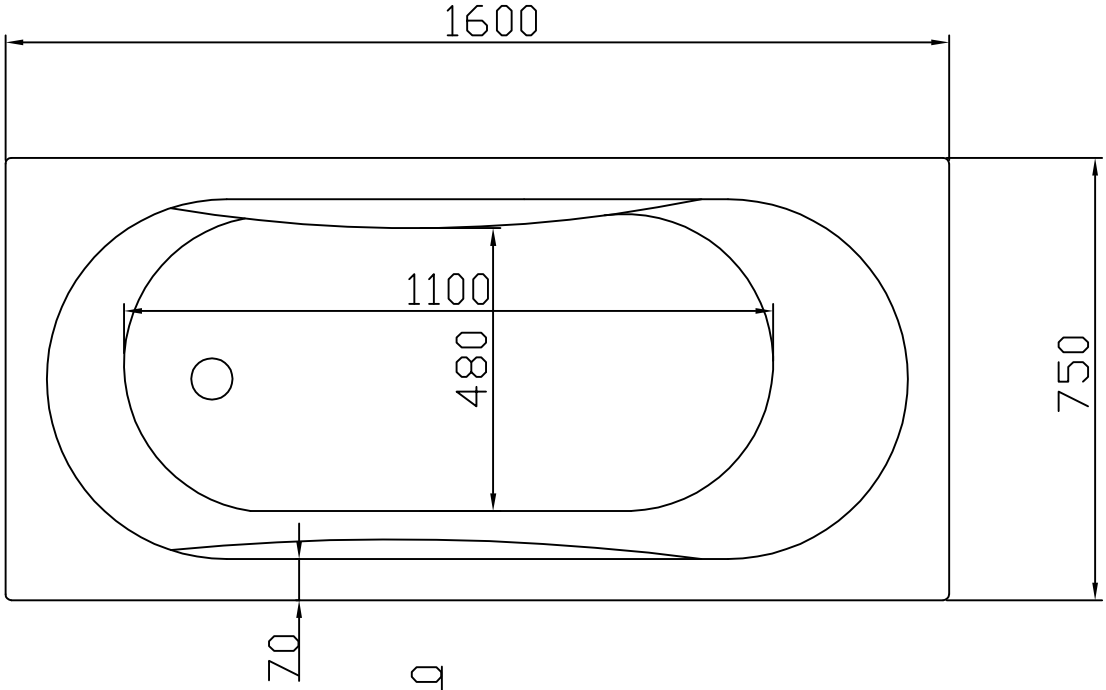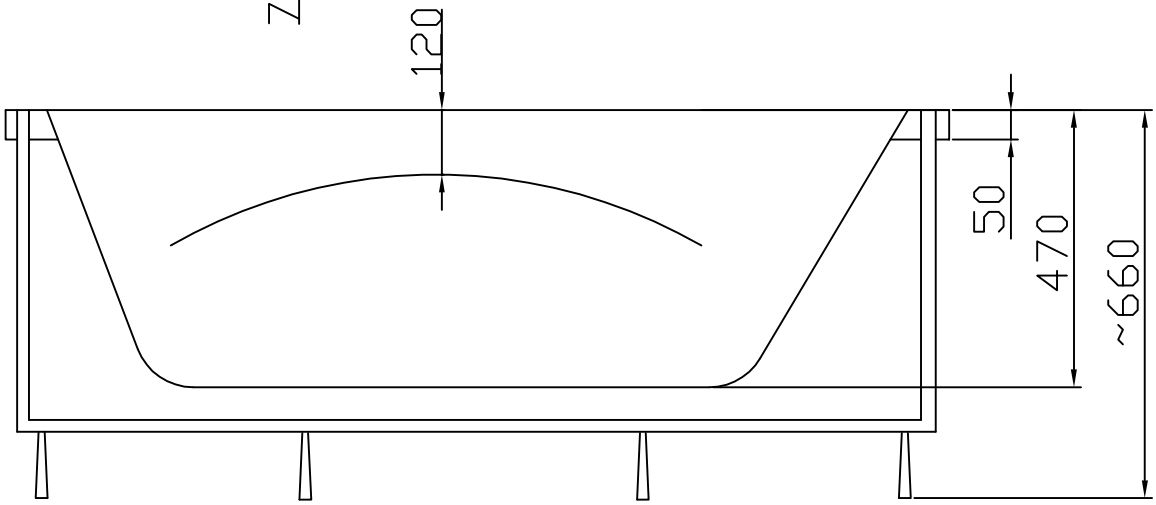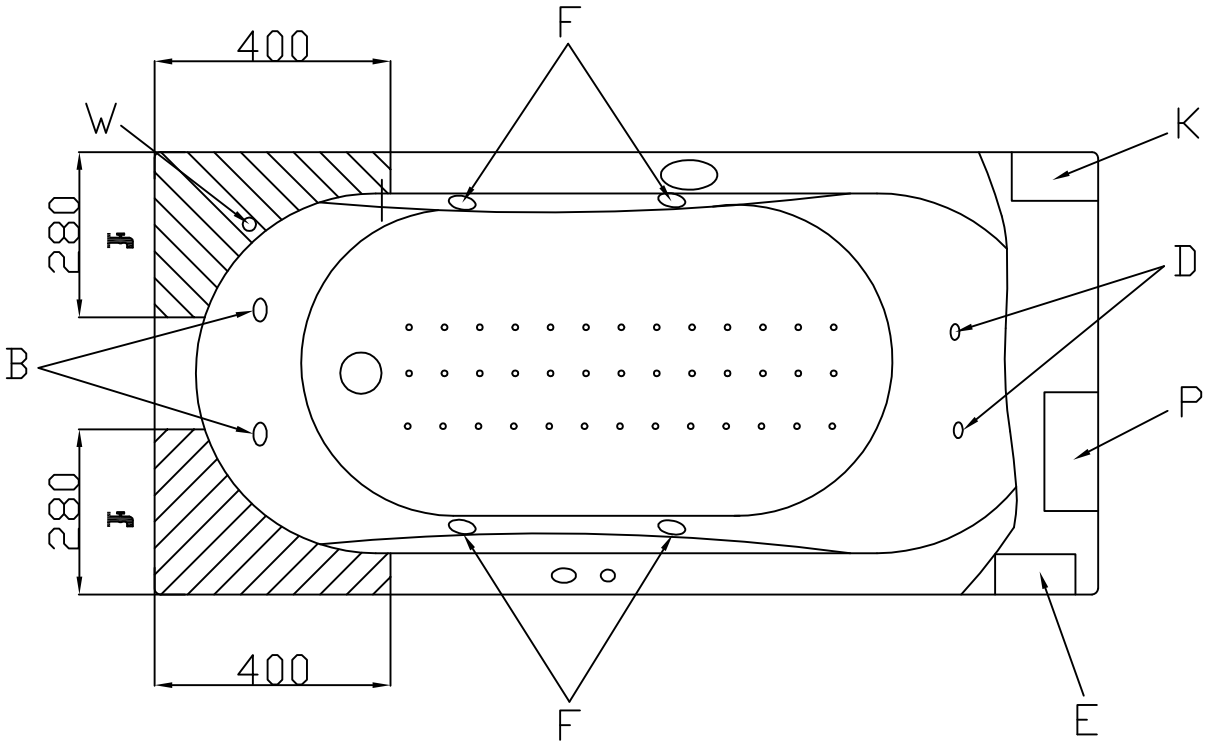JERSEY 160