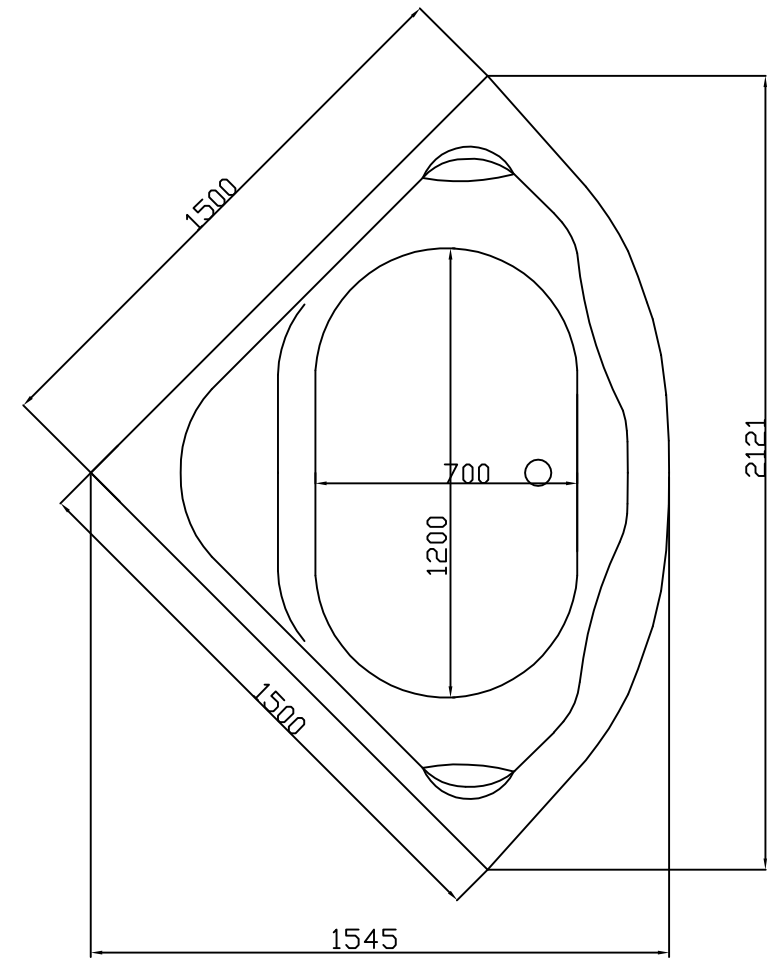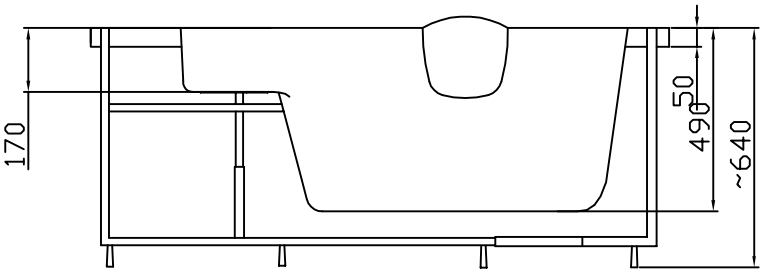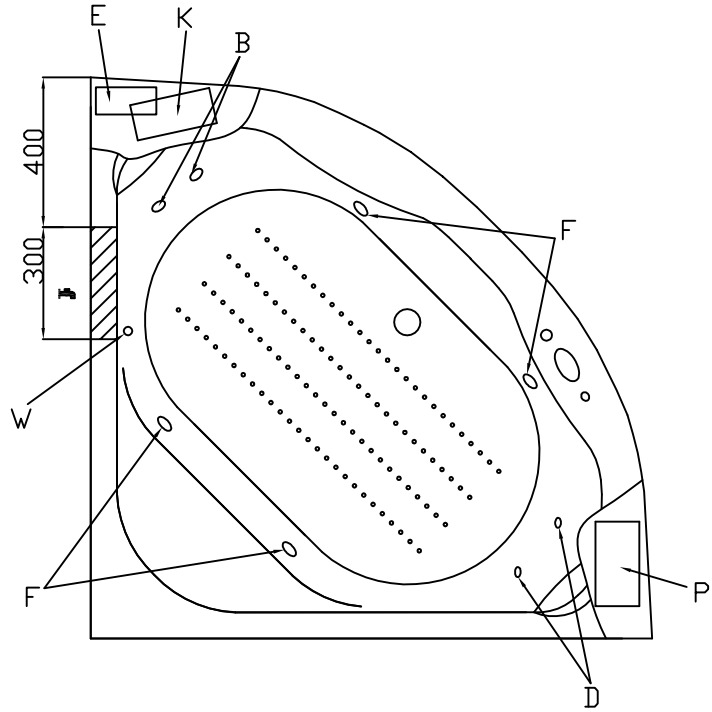Hawaii 150