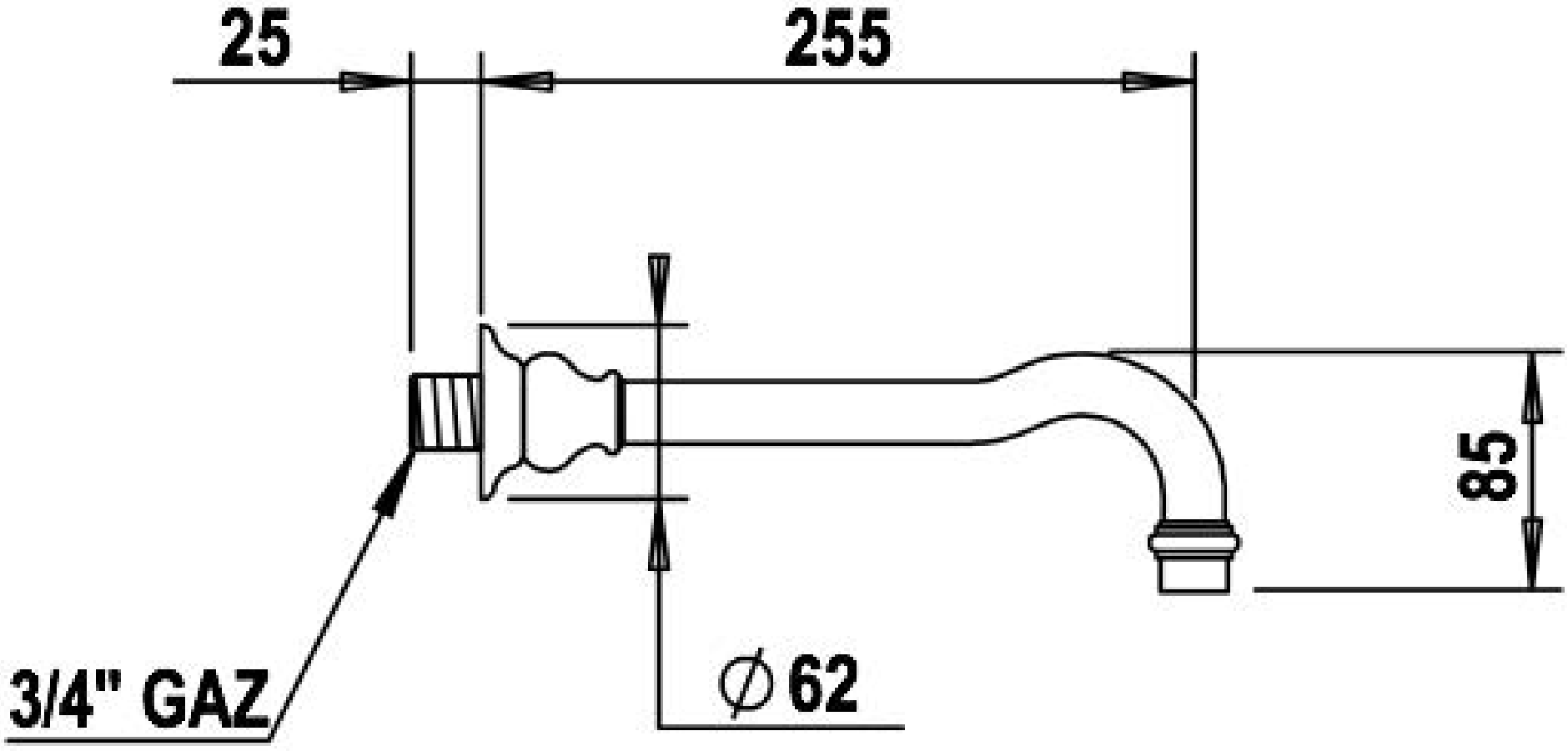
25
255
85
3/4" GAZ
∅62