5613 Seto fire resistant

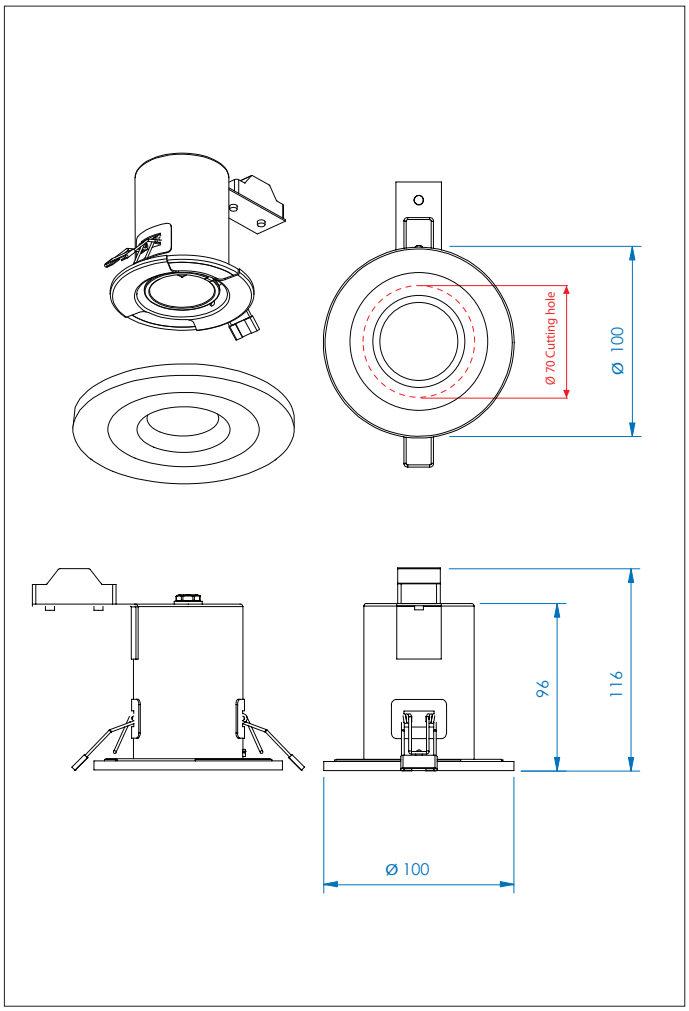

Class 3

F

IP65

Zi

PC

0.67 kg

70 mm

1 x 50w GU5.3	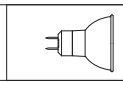	excl.
Transformer	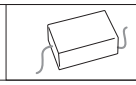	excl.
Zones	1 2 3	

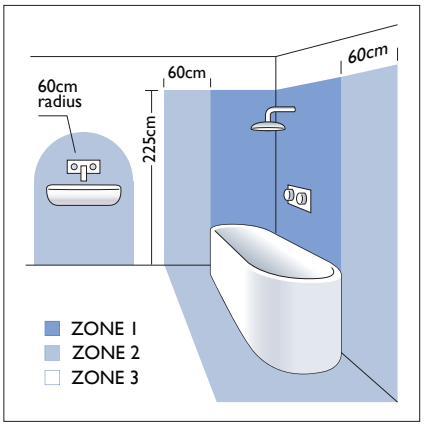

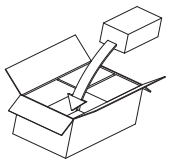

TBC

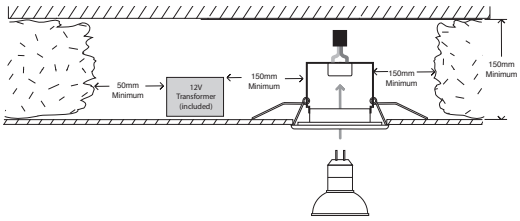

90 Minutes

BS 476: part 21

Astro Lighting Ltd.
G2 River Way, Harlow
CM20 2DP, Great Britain

T: +44 (0) 1279 427001
F: +44 (0) 1279 427002
sales@astrolighting.co.uk
www.astrolighting.co.uk