5619 Kamo fire-rated

astro

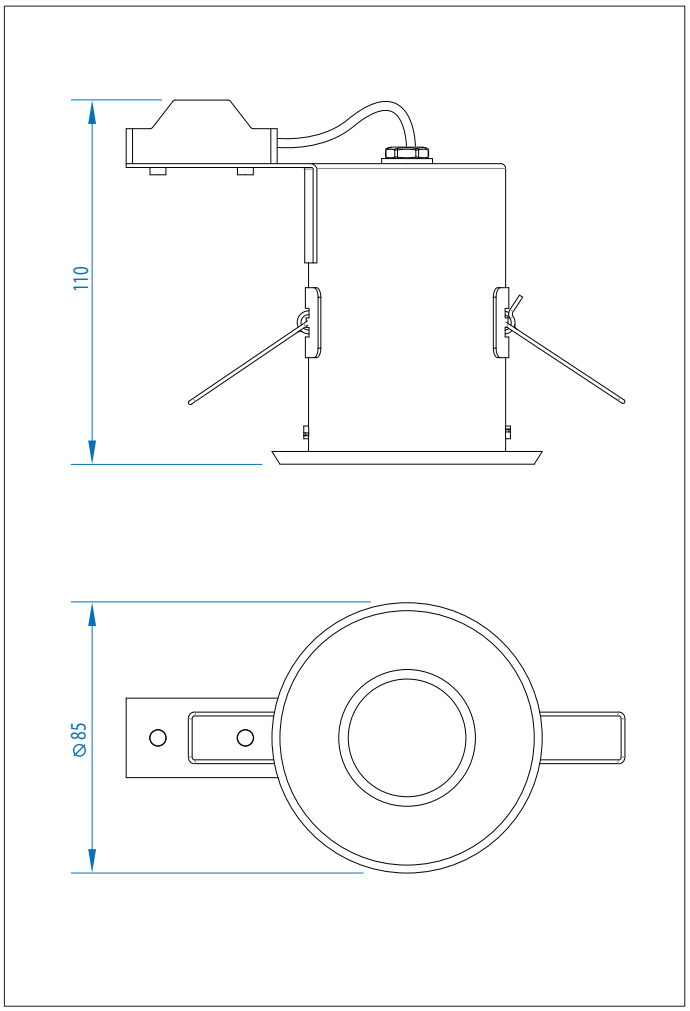

Class 3

F

IP65

Zi

Wh

0.2 kg

70 mm

1 x 50w GU5.3	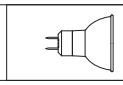	excl.
Transformer	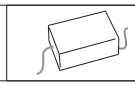	excl.

Zones 1 2 3

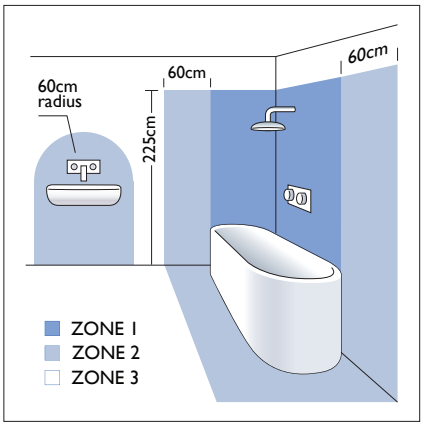

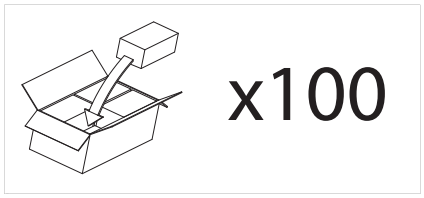

Astro Lighting Ltd.
G2 River Way, Harlow
CM20 2DP, Great Britain

T: +44 (0) 1279 427001
F: +44 (0) 1279 427002
sales@astrolighting.co.uk
www.astrolighting.co.uk