wash me_70 cm washbasin, ceramics

CL/02.01032, CL/02.30032, CL/02.31032
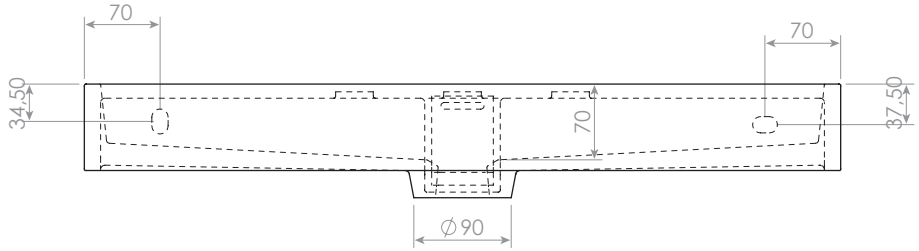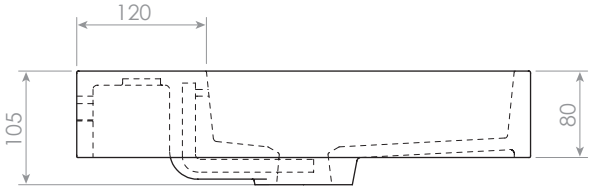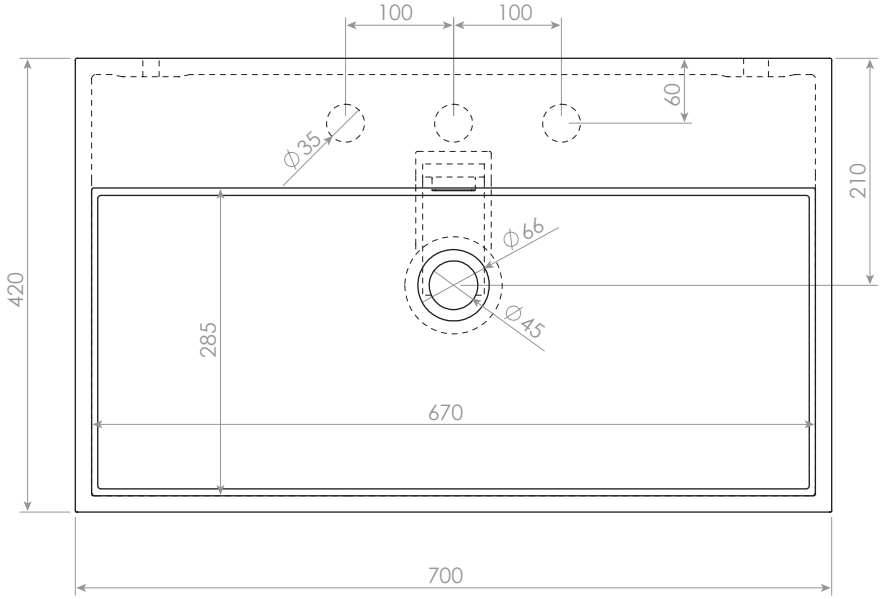
clou
bath findings