New Flush

ceramics, with tap hole

clou

CL/03.03410.01

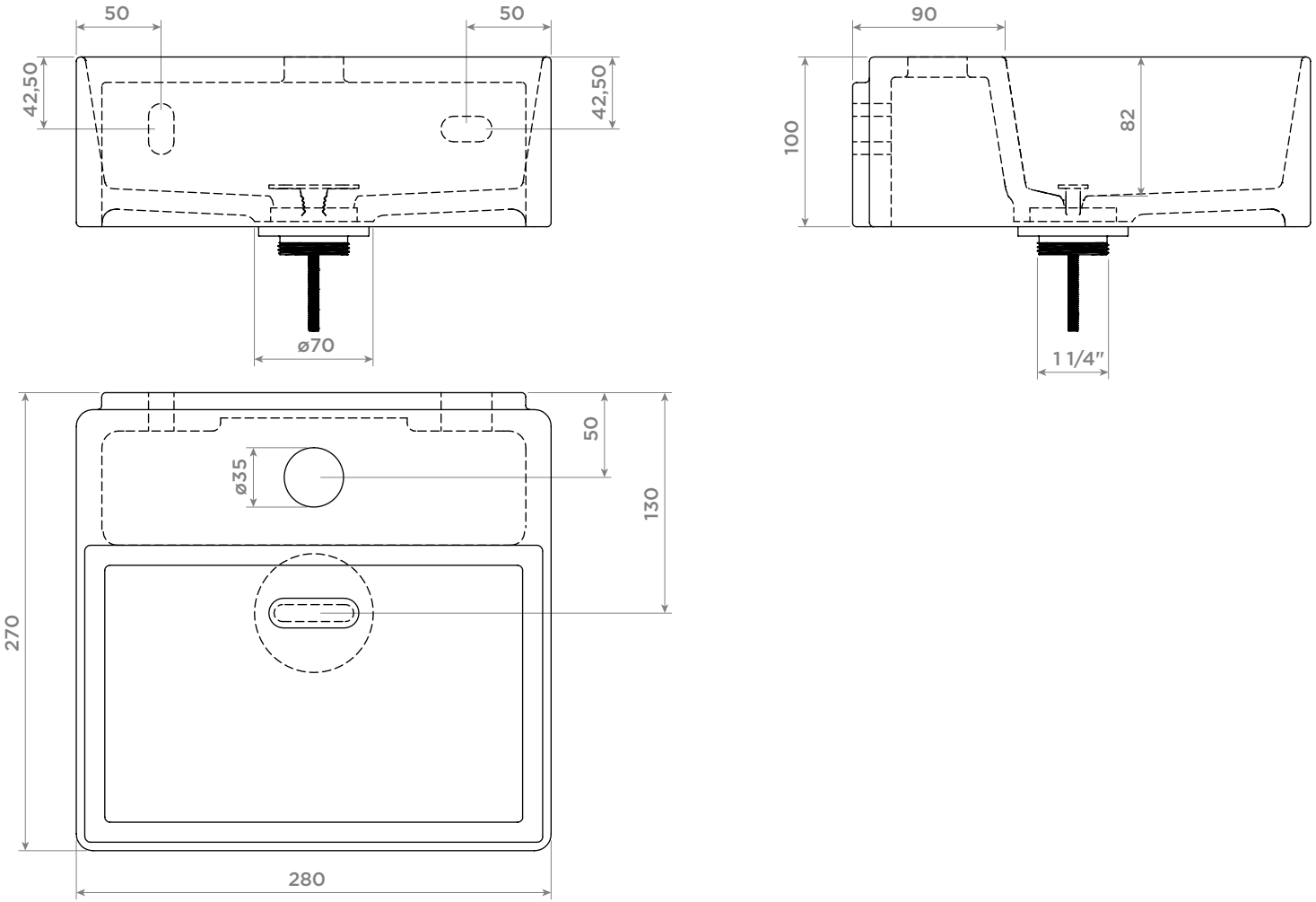

Dimensions in mm, for reference only / 02.12.2016 / rev_01

www.clou.nl